DESIGN A NANO SATELLITE ATTITUDE CONTROL SYSTEM USING PROPORTIONAL-DERIVATIVE CONTROLLER

[1]Raja Munusamy, [2]Dr Ugur Guven, [3]Dr Om Prakash

[1]Assistant Professor-SS, [2]Sr. Professor, [3]Professor
[1]Aerospace Engineering Department,
[1] University of Petroleum & Energy Studies, Dehradun, India

Abstract: The Attitude Control System (ACS) is important to maintain the satellite in to prescribed/determined orbit from perturbed/disturbed orbit. The attitudes (Roll, Pitch, Yaw) of satellite changes due to orbital perturbation. The orbital perturbations such as aerodynamic drag, solar drag, non-homogenous of earth surface, magnetic disturbances, moon/sun perturbation. At low earth orbit (LEO) having enormous amounts of aerodynamic drag and gravitational attraction due to the surface of the earth. This paper discussed the disturbances from aerodynamic drag, solar drag, and magnetic drag. It is mandatory to control & correct the attitudes of satellite in to the same orbit. The point accuracy of satellite is important to collect the data from several on-board sensors in the system. The solar panel must deflect towards SUN for receiving optimal power. The communication Antennas must transmit/Receive signal line of sight (LOS) propagation from satellite to ground station. The ACS with introduced the proportional – Derivative (PID) controller for various attitude corrections. This paper considered the following nanosatellite design the attitude controller such as NPSAT-1, SRM Sat, Pratham IIT Bombay Sat. The various analysis of transient response implemented of the nano satellite time domain specification are Rise time (t_r) output of the satellite system between 10% range to 90% of steady state output. The Peak time (t_p) indicates the at particular time maximum magnitude of the signal. The maximum overshoot (%MP) indicates the damping of actual to critical damping. Settling time (t_s) indicates the final time reach at steady state value. The steady state errors (e_{ss}) indicates the system have less errors without any oscillation is derived. The controllers use to reduce the oscillation due to the perturbation forces affects the attitude of the satellite. The ACS systems developed with MATLAB/SIMULINK. Also it is decrease the errors in the satellite system dynamics. The effects of satellite dynamics without controller and with controllers are performed.

***IndexTerms* – Attitude control, PD controller, Time domain specifications, Root locus analysis.**

I. INTRODUCTION

The satellite attitude control system design either passive techniques or active techniques to calculate the disturbances in the model. The passive method using gravity gradient boom introduced in the model without any power to control the satellite. But Active techniques there is small motor attached with satellite body frame. This is called as momentum wheels or flies wheels to control the model. This requires the signal from attitude sensor such as GYRO's, INS, and IMU. These attitudes are comparing with the pre-determined attitude of the satellite and generate the errors in the signal detector. In the model the comparator act as a signal detector compare the feedback signal from attitude sensor and reference signal. [1] The main function of the controller to make the control action to the satellite dynamics/models. The gain and damping ration of the controller affects the transient response of the dynamics model. At Low earth orbiting satellite attitude controls mostly used to attitude sensors Rate Gyro. At High earth orbits are using SUN SENSOR, EARTH SENSOR, HORIZON SENSOR, STAR SENSOR for attitude estimation

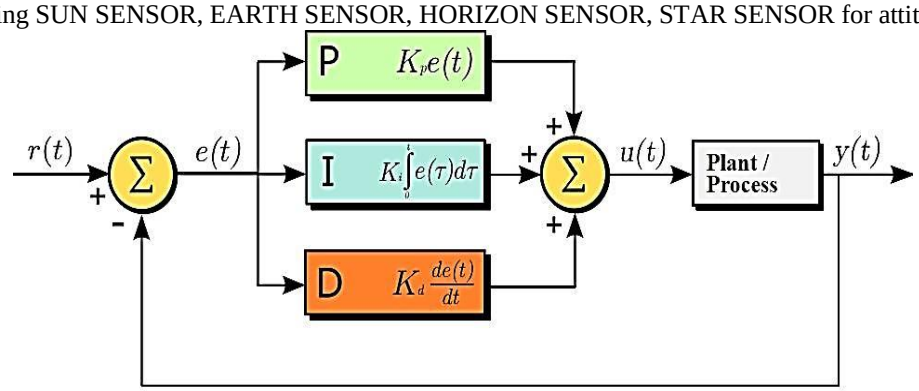

Figure (1) Satellite attitude control with PID controllers

The proportional-Integral-Derivative (PID) controls widely used to control the attitude of plants/models. The plants are referring as satellite dynamics. The both controller having some advantages. The PID controller Figure (1) indicates the transfer function of PID controllers and Gain of each controller $\mathbf{K_p}$, $\mathbf{K_i}$ **&** $\mathbf{K_d}$ Proportional Gain-proportional errors, Integral Gain-Integral errors, Derivative Gain-Derivative errors in the model. The errors signal expressed in e(t), Satellite input/reference signal (Pitch, Yaw, Roll) and control signal expressed in u(t). The output of the process/dynamics is y(t) or rates of the satellite.

The spacecraft control systems consist of two parts 1) attitude determination 2) attitude control (ADCS). This subsystem called as Attitude Determination and Control System can be divided in to following function such as to determine the attitude, predict the future attitude, and control the attitude of satellite. This paper presents the control part of the nana spacecraft/satellite attitude corrections. [2] The main parts of ADCS used to determine the attitude with the help of satellite attitude sensor. The

satellite reference input signal compare with feedback signal from attitude sensor. If there is any variation in the feedback signal with respect to reference/pre-determined attitude then ignites the actuator to generate the control torque/forces. This control torques used to stabilize the orientation of satellite in to actual path in the orbit.

- Satellite Attitude determination (SAD)
- Satellite Attitude Prediction (SAP)
- Satellite Attitude Control (SAC)

The SAD is the process of computing the orientation of satellite with pre-determined point accuracy from on board sensors. The SAP is the process of estimating the future attitude of the satellite model. The SAC is the process of control the orientation of the satellite.

Control System Design Specifications:

- Settling time ≤ 0.2 seconds
- Improve the Rise time
- Improve the peak time
- Reduces the overshoot (Damping)

II. Spacecraft Attitude Dynamics: Spacecraft considered- NPS Aurora Satellite (NPSAT-1)

Specifications of NPSAT-1:

550 km altitude, low earth circular orbit

The principal moments of inertia [3] of NPSAT-1

$$= \begin{bmatrix} 24.67 & 0 & 0 \\ 0 & 22.63 & 0 \\ 0 & 0 & 11 \end{bmatrix}$$

The satellite inertia is expressed in kg-m^2

Orbital angular velocity, $\Omega = 0.0011068$ rad/s

Total disturbance torque = Magnetic Disturbance Torque + Aerodynamic Torque +Solar Torque

$= 1.04 \times 10^{-4}$ N.m

Angular momentum generated by momentum wheel (actuator), $h = 10$ Nms

Three attitude axes (Roll, Pitch, and Yaw) are decoupled

III. Vehicle Orientation In Low Earth Orbit (LEO)

The position and orientation of the vehicle/satellite represents with reference frame or coordinate frame. In figure 3 briefly discuss about the various reference frame. To calculate the vector from one frame to another frame (Example: Body to orbit frame or orbit to Earth frame). We need to use Euler methods for coordinate transformation. [4] In order to obtain the angular rate data from angular velocity in body fixed frames, the satellite attitude referenced to earth-fixed reference frame.

Representing the Attitude of satellite:

Euler angles are (Roll angle **φ**, Pitch angle **θ**, Yaw angle **ψ**). Roll angles represent the satellite deflects about x-axis, Pitch angles represent the satellite deflects about y-axis, Yaw angle represent the satellite deflects about z-axis. The position/velocity of inertial coordinate frame measured from satellite body frame. Euler angles are shown in Figure (2)

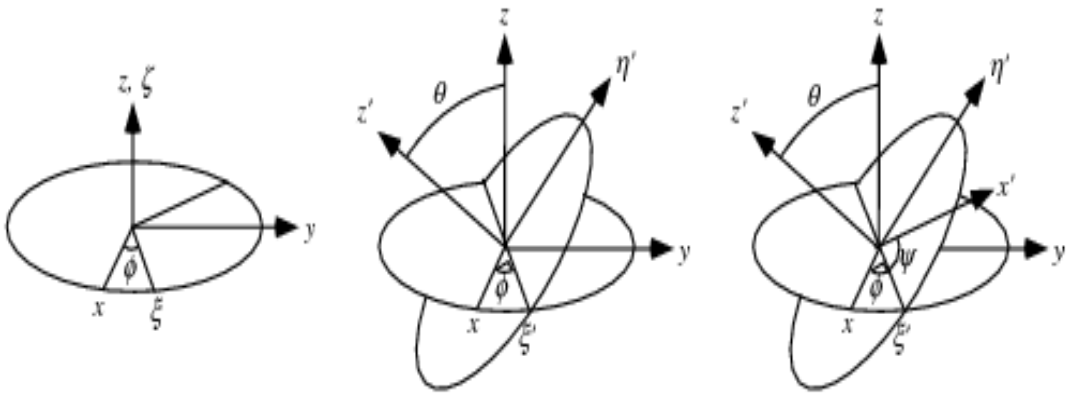

Figure (2) Satellite attitude orientation from euler angles

The rotation in x-direction, y-direction, z direction, mentioned in the equation (3.2), (3.3), (3.4). To multiply this entire matrix we will get the rotation matrix from body to orbit frame equation (3.5). The rotation in the frame considered as 313 rotations. The satellite body frame represent **(S_x, S_y, S_z).** 1st rotation from body to S_z axis, 2nd rotation from satellite body to S_x axis, 3rd rotation from body to S_z axis. [5] Euler angle measure the current coordinate transformation from satellite body to inertial frame (IF). The earth is considered as an inertial frame of reference. The Euler angles (3.1) given below

$$\Theta = \begin{pmatrix} \phi \\ \theta \\ \psi \end{pmatrix} \tag{3.1}$$

The rotation matrices (3.2), (3.3), (3.4) are given as follows:

$$R_{x,\phi} = \begin{pmatrix} 1 & 0 & 0 \\ 0 & cos\phi & -sin\phi \\ 0 & sin\phi & cos\phi \end{pmatrix} \tag{3.2}$$

$$R_{y,\theta} = \begin{pmatrix} cos\theta & 0 & sin\theta \\ 0 & 1 & 0 \\ -sin\theta & 0 & cos\theta \end{pmatrix} \tag{3.3}$$

$$R_{z,\psi} = \begin{pmatrix} cos\psi & -sin\psi & 0 \\ sin\psi & cos\psi & 0 \\ 0 & 0 & 1 \end{pmatrix} \quad (3.4)$$

As a result, the rotation matrix (3.5) R_B^o becomes, Body to orbit frame [6]

$$R_B^o = R_z(\psi)R_y(\theta)R_x(\phi)\begin{pmatrix} c\psi c\theta & -s\psi c\phi + c\psi s\theta s\phi & s\psi s\phi + c\psi c\phi s\theta \\ s\psi c\theta & c\psi c\phi + s\psi s\theta s\phi & -c\psi\, s\phi + s\psi c\phi s\theta \\ -s\theta & c\theta s\phi & c\theta c\phi \end{pmatrix} \quad (3.5)$$

IV. Orientation of the satellite

In this section discuss about the types of reference frames, Shown in figure (3). If we want the position of the satellite need to converts the body to orbit, and orbit to earth frame to getting the angular rates of the body. [7] The body frame attached with the center of the satellite body. The earth frame is orientated with center of the earth.

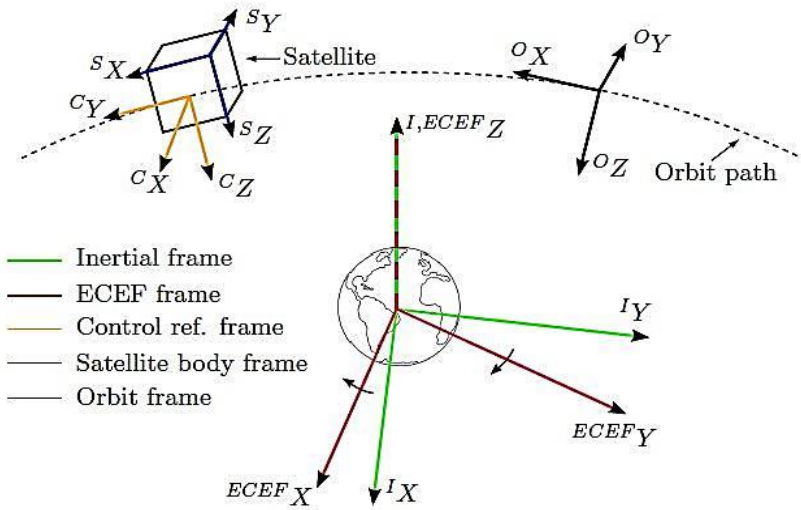

Figure (3) Satellite frame of reference

Orbit Frame*: The orbit frame the satellite mass is attached with it . The axis O_z its represents Nadir pointing or focus of center of the earth surface. The axis Ox its represents Satellite motion in the body. Also axis ox ⊥ oz. The axis Oy represents the complete right hand coordinates.*

Earth-Centered Earth Fixed Frame (ECEF): *The ECEF from located at center of earth. The axis X & Y rotates in the Earth center inertial (ECI) frame or non-rotating frame. Usually we consider earth is an inertial reference frame. The axis Z located at North Pole. The axis X crossing among the Greenwich meridian and the Equator. At this point both longitude and latitude considered as 0° degree. The axis Y consider as right hand coordinate system.*

Satellite Body Frame: *The body frame fixed with satellite body. The body frame attached with satellite body. The axis Sz located at Nadir direction of the satellite. The axis Sx and Sy crosses the orbit frame when attitude of satellite referred as 0° degree. At this case all the attitude of satellite pitch, yaw, and roll angles becomes zero.*

Earth center Inertial (ECI) Frame: *ECI frame is fixed in space. The axis Ix located from vernal equinox at center of the earth. The axis Iz it represents the direction of angular velocity of the orbit. The axis Iy orthogonal to Ix and Iz.*

V. Dynamics of the satellite

The angular momentum (5.1) equation angular velocity [8] is Inertial Reference Frame must be expressed in Body Frame.

$$H=\begin{bmatrix} Ixx & 0 & 0 \\ 0 & Iyy & 0 \\ 0 & 0 & Izz \end{bmatrix} \grave{\omega}_{(I/B)} \quad (5.1)$$

$$\grave{\omega}_{(I/B)} = (\dot{\phi}-\Omega_0\psi)\widehat{b_1} + (\dot{\theta}-\Omega_0)\widehat{b_2} + (\dot{\psi}-\Omega_0\phi)\widehat{b_3} \quad (5.2)$$

The angular momentum in the satellite having two components, One is angular momentum in the satellite body another component is angular momentum in the thrust wheel or fly wheel. The satellite principle moment of inertia referred as **Ixx, Iyy, Izz.** Angular velocity, **Ω.** The total angular momentum of the satellite as given below (5.3) equation [9]

$$H = H_{satellite\ body} + H_{Momentum\ Wheel} \quad (5.3)$$

It rotates Centre of mass of the satellite body.

The rate of change of angular momentum is called as external moments

$$M = \left(\frac{dH}{dt}\right)_{Inertial} = \left(\frac{dH}{dt}\right)_{Body} + \grave{\omega}_{(I/B)} H \quad (5.4)$$

The external moments including the perturbation forces such as Aerodynamic force, solar force, Gravitational attraction of the body and magnetic drag.

Euler angle and angular rates measured from the torque equation, the attitude dynamics of the satellite equation (5.5), (5.6), (5.7) as given below (pitch rates, roll rates, and yaw rates)

$$\frac{\theta(s)}{T_y(s)} = \frac{\frac{1}{I_y}}{S^2+\frac{K_{VY}}{I_y}S+\frac{3\Omega^2(I_x-I_z)+k_y}{I_y}} \quad (5.5)$$

$$\frac{\phi(s)}{T_x(s)} = \frac{\frac{1}{I_x}}{S^2+\frac{K_{VX}}{I_x}S+\frac{4\Omega^2(I_y-I_x)-\Omega h_y+k_x}{I_x}} \quad (5.6)$$

$$\frac{\psi(s)}{T_z(s)} = \frac{\frac{1}{I_z}}{S^2+\frac{K_{VZ}}{I_z}S+\frac{\Omega^2(-I_x+I_y)-\Omega h_y+k_z}{I_z}} \quad (5.7)$$

The orbital angular velocity, Ω is constant. The denominator equation of the second order transfer function is denoted as charactertics equation (5.8) is given by [10]

$$S^2 + 2\delta\omega_n + \omega_n^2 \quad (5.8)$$

Undamped natural frequency, ω_n and damping ratio, **δ** decides the types of damping or oscillation in the system.

VI. Roll attitude control system of NPSAT-1

The Roll attitude dynamics of the satellite referred from equation (5.6). The principle moment of inertial of Nano satellite NPSAT-1 named as **[24.67 22.63 11] kg-m²**. The angular velocity of the satellite **0.0011068 rad/s** at 550km Altitude. The closed loop response of roll attitude dynamics referred $\frac{\phi(s)}{T_x(s)}$. The input of the model is control torque and output of the model is actual pitch. The gain of the gyro is assumed as 1. The Figure (4) Shown the comparison of reference pitch and feedback signals measured from Rate Gyro's (RG) produces the errors in the system. These errors are minimized from controllers and generate the control torque to the satellite dynamics. [11], [12]

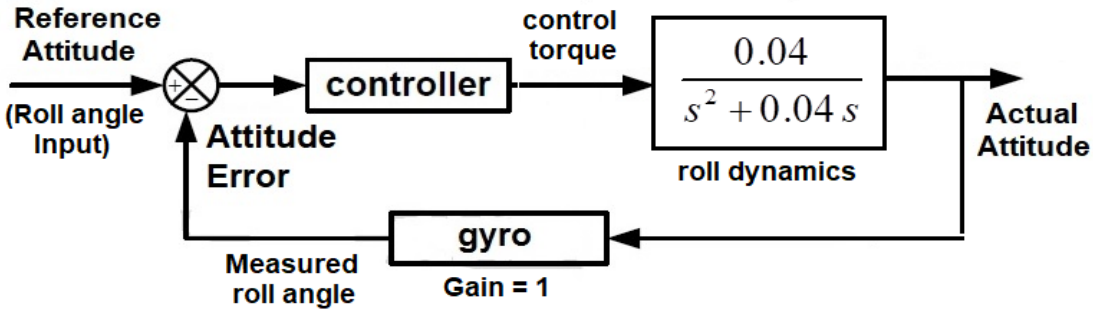

Figure (4) Roll attitude control

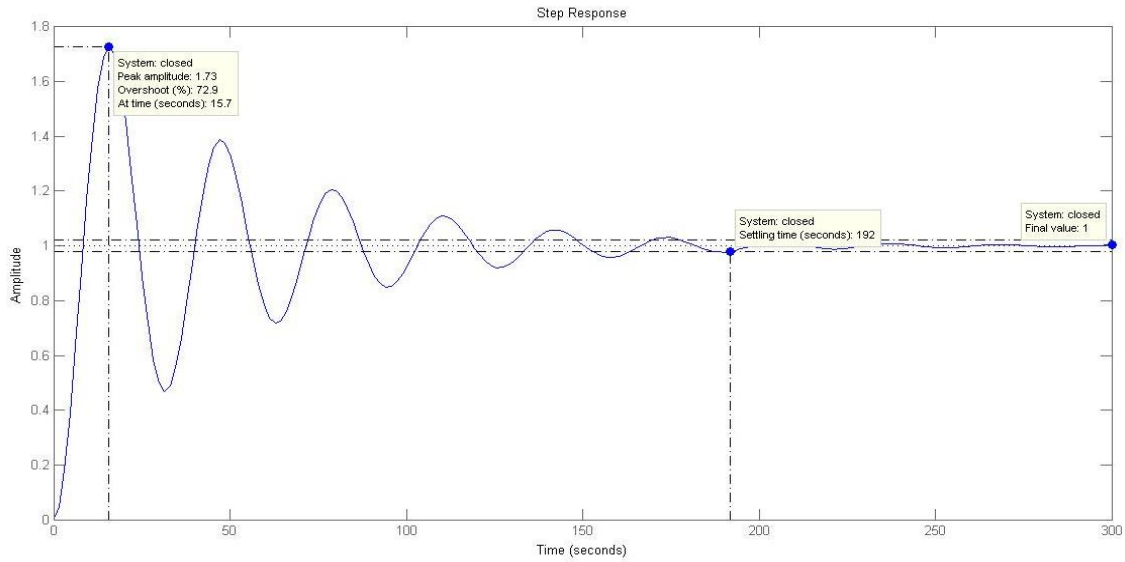

The step response (shown in Figure.5) of the roll attitude transfer function without controller

Figure (5) Satellite roll attitude dynamics with step input (without controller)

From Figure 66, it is clear the damping is 73% (overshoot) and the final time is 192 seconds (Settling time). We need to reduce it to ≤ 0.2 seconds). And also, the steady-state is settled exactly at 1 (zero steady-state error). Hence there is no need for integral control.

Design a Proportional – Derivative control (PD-Control) for Roll attitude

We have to design PD controller to improve the transient response (overshoot and settling time). Theoretically, the damped frequency of oscillation is $\omega_d = \omega_n\sqrt{1-\xi^2}$, ω_n is the natural frequency of oscillation (rad/seconds). The damping ration desired the types of oscillation. The equations $-\xi\omega_n \pm j\omega_d$ first part indicates the real value; second part indicates the imaginary value. As per the design specification the settling time less than 0.2 is calculated by $\xi\omega_n = \frac{4}{0.2}$ = **20**. [13]

To determine the imaginary part value it require to find the angles from closed dominant pole, draw the line from closed dominant pole to origin of the s-plane (or) frequency plane, $\theta = \cos^{-1}(\xi) = \cos^{-1}(0.826)$ = **34.3°** as shown in Figure 6 (Here, for design point of view, the **overshoot percent is taken as 1%** (equal to damping ratio of **0.826**)). From Figure (6) determined the real value from closed dominant pole [14]

$$\tan(34.3) = \frac{\omega_d}{20} \quad \Rightarrow \quad \omega_d = \mathbf{13.64}$$

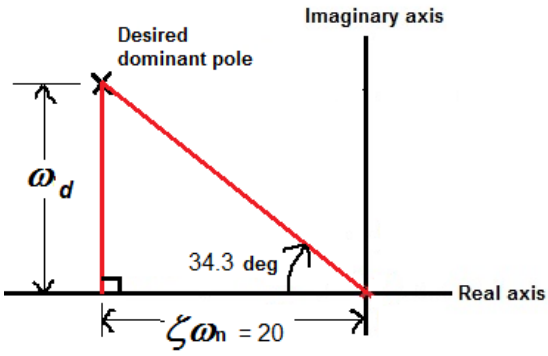

Figure (6) Location of closed dominant pole

As per the design specification of NPSAT-1 is settling time of 0.2 seconds are **–20±13.64*j***. The NPSAT-1 roll attitude dynamics clearly indicates, there are two poles in the dynamics one in the origin of the s-plane another one is -0.04 shown in Figure (7) finding the angles θ_1 and θ_2 from closed dominant pole to other poles and zeros. [15], [16] There are no zeros in the pole-zero plot. This method used to design the PD compensated controller by using root locus analysis

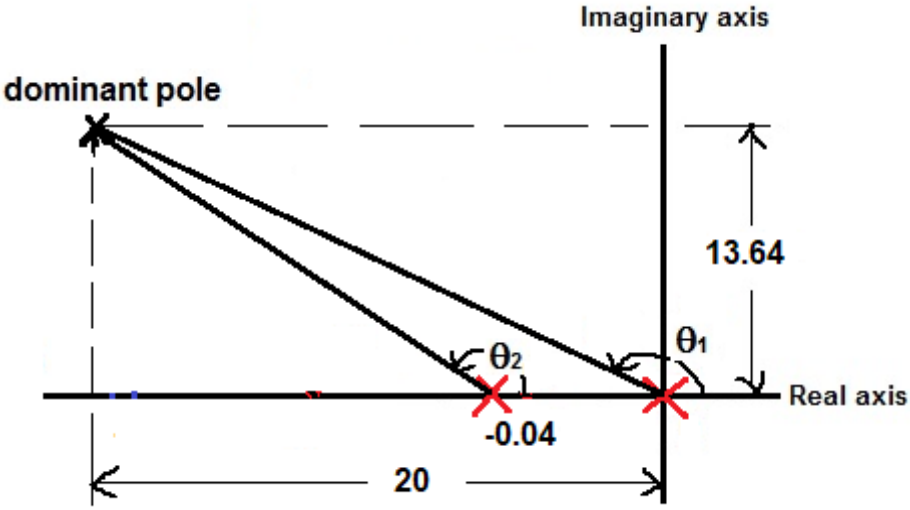

Figure (7) PD compensated design (Complex pole to other pole)

The angles from closed dominant pole to other pole are

$$\theta_1 = 180^\circ - \left[\tan^{-1}\left(\frac{13.64}{20}\right)\right] = 145.7^\circ$$

$$\theta_2 = 180^\circ - \left[\tan^{-1}\left(\frac{13.64}{20-0.04}\right)\right] = 145.65^\circ$$

This angles are used to find the zero location For finding the PD controller zero (z_c), The line connecting from complex pole to pole at the origin and pole at -0.04. Let we assume complex pole considered as A.

The angles from complex pole A

= 180^0 – (summation of angles measure from complex pole to other poles) + (summation of angles measure from complex pole to other zeros)

$$= 180 - (\theta_1 + \theta_2) = 180 - (145.7 + 145.65) = \mathbf{-111.35^\circ}$$

Now, find the PD compensated zero from Figure (8) from angle measured from complex pole A (**-111.35^0**)

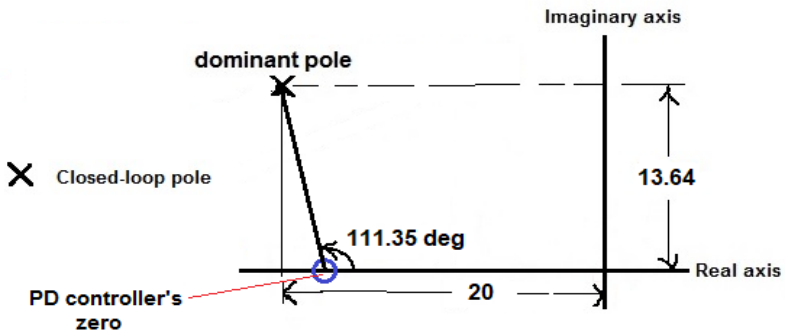

Figure (8) Attitude controller PD zero

Using the geometry [17] shown in Figure 8, $\tan\left(180^{\circ} - 111.35^{\circ}\right) = \dfrac{13.64}{20 - z_c}$

To design the PD compensator zero (z_c,) from above geometry calculate the value **–14.66.** Now, the PD controller dynamics is ***K* (s + 14.66).** The K is the loop gain. The loop gain found from root locus at 1% maximum overshoot is 995.

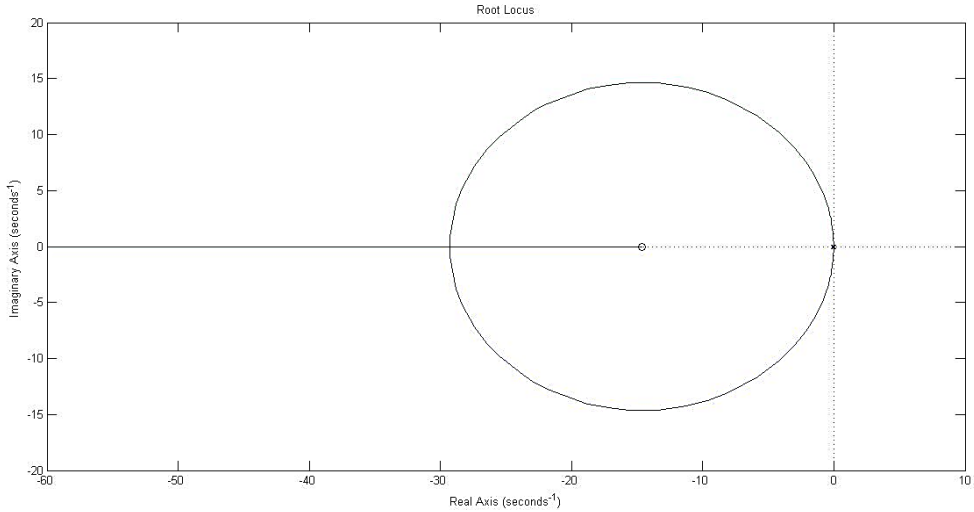

Figure (9) Attitude dynamics with PD controller/compensator (Root locus response)

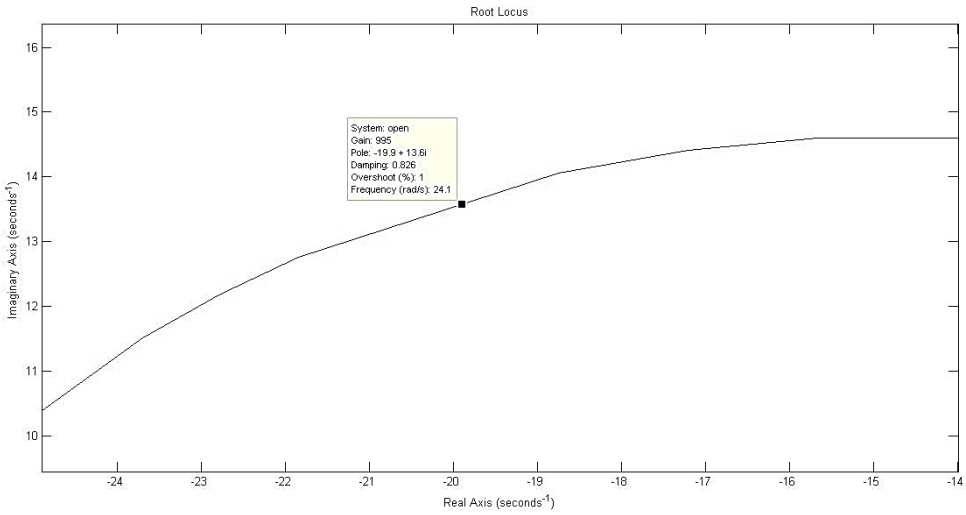

Figure (10) Zoomed response of root locus for 1% overshoot

The MATLAB Simulation for closed loop system includes the satellite roll attitude dynamics and PD compensator.

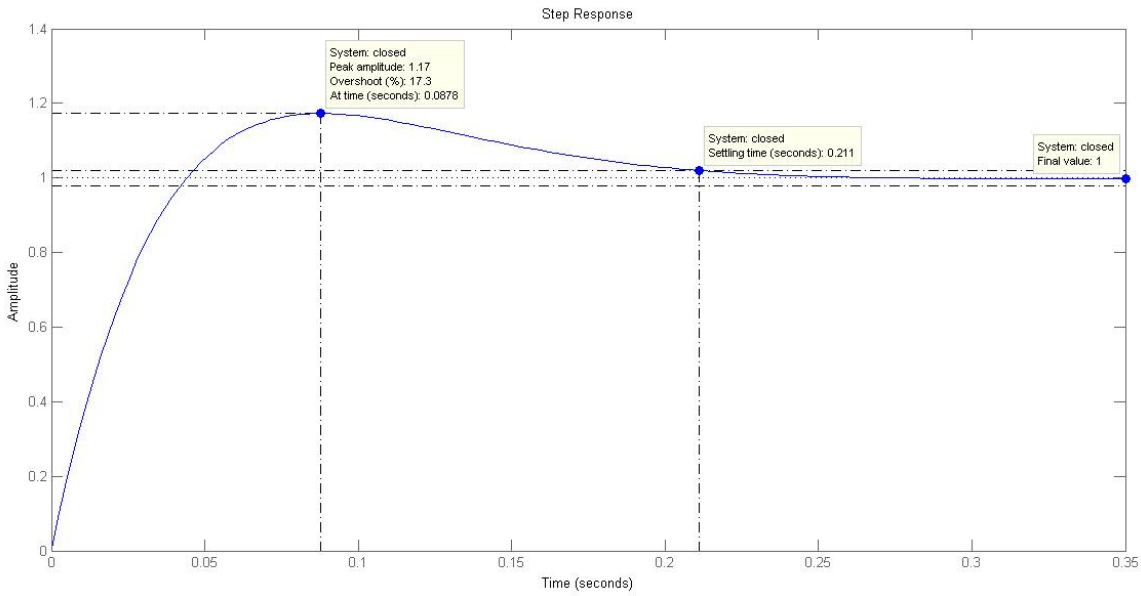

Figure (11) GAIN *K* = 995, Response from with PD controller

In Figure 11, the system settling time is 0.211 Sec and overshoot is improved 17.3 % with less than 0.1 Sec peak times. Also it improved the rise time of the system as per the design prediction of NPSAT-1.

The SIMULINK model of roll attitude control diagram In Figure 12. This includes the dynamics of satellite and orbital perturbation at low earth orbiting satellite. To introduces the PD controllers ***K* (s + 14.66)** K is the loop gain [18], [19] calculate from root locus analysis 995. The output response plot measured from scope block considered the step input. The oscillation of satellite due to the perturbation forces measured different time domain specification and variation of maximum overshoot expressed in (%).

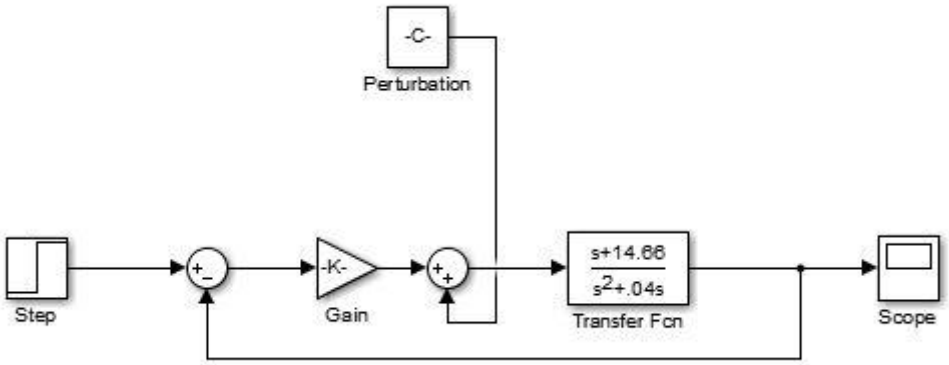

Figure (12) SIMULINK Attitude Roll Controller with Disturbances

The output response plot (shown in Figure 13) having fast rise time is 0.033 second it indicate the system behaves the fast response even with perturbation/disturbances. Also improved the settling time.

VII. RESULTS

The design specification of satellite attitude control system is settling time is less than 0.2 sec. Also improve the other transient response such as rise time and peak time and reduces the maximum overshoot. Table (1) indicates the roll attitude response with controller and without controller NPSAT-1 refers figure 5 and figure 11. Table (1) indicates the pitch and yaw attitude response of NPSAT-1. From the table it is clearly improved the transient response of settling time desired value ≤ 0.2 seconds. And improved the rise time & peak time and reduces the overshoot. The following table (3) & table (4) Satellite attitude dynamics response with controller and without controller SRM Sat and Pratham IIT Bombay. The satellite principle moment of inertia and angular velocity taken from the satellite is mentioned below the table 3 & 4.

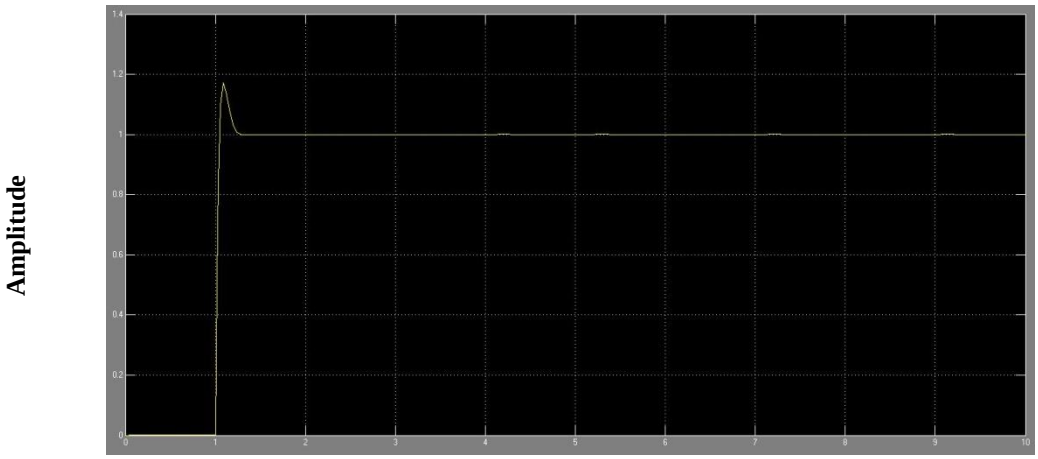

Figure (12) Output/Responses from attitude roll control

Table 1: Roll attitude response with controller and without controller NPSAT-1

Specifications	Without controller	With controller
Rise time	5.64 seconds	0.033 seconds
Overshoot	72.9%	17.3%
Settling time	192 seconds	0.211 seconds
Steady-state error	zero	zero

Table 2: Pitch and Yaw attitude response with controller and without controller NPSAT-1

Specifications	Pitch Attitude Dynamics		Yaw Attitude Dynamics	
Rise time	5.38 sec	0.033 sec	3.92 sec	0.0332 sec
Overshoot	71.7%	17.3%	61.7%	17.2%
Settling time	169 sec	0.211 sec	86.2 sec	0.212 sec

Table 3: Satellite attitude dynamics response with controller and without controller SRM Satellite

SRM SATELLITE: [I_{xx} = 6.2911 I_{yy} = 5.9162 I_{zz} = 4.6085] kg-m^2, Ω = 0.0010239 rad/s (at 867km Altitude)

Specifications	Roll Attitude Dynamics		Pitch Attitude Dynamics		Yaw Attitude Dynamics	
	Without controller	With controller	Without controller	With controller	Without controller	With controller
Rise time	3.0218 Sec	0.0332 Sec	2.9526 Sec	0.0333 Sec	2.6813 Sec	0.0333 Sec
Overshoot	52.7614 %	17.1712 %	51.5524 %	17.1642 %	47.0268 %	17.1113 %
Settling time	49.2573 Sec	0.2111 Sec	41.6600 Sec	0.2111 Sec	35.8677 Sec	0.2112 Sec
Peak time	8.1148 Sec	1.1717 Sec	7.6299 Sec	0.0881 Sec	6.7942 Sec	0.0882 Sec

Table 4: Satellite attitude dynamics response with controller and without controller Pratham IITB Satellite

PRATHAM IITB SATELLITE: [$I_{XX} = I_{XX} = 0.116$ $I_{YY} = 0.109$ $I_{ZZ} = 0.114$] KG-M^2, Ω = 0.0010346 RAD/S (817KM)

Specifications	Roll Attitude Dynamics		Pitch Attitude Dynamics		Yaw Attitude Dynamics	
	Without controller	With controller	Without controller	With controller	Without controller	With controller
Rise time	1.9424 Sec	0.0588 Sec	1.9572 Sec	0.0618 Sec	1.9466 Sec	0.0598 Sec
Settling time	3.5335 Sec	0.2449 Sec	3.5591 Sec	0.2494 Second	3.5409 Second	0.2466 Sec
Peak time	5.7863 Sec	0.1354 Sec	7.5608 Sec	0.1409 Sec	6.7576 Sec	0.1365 Sec

VIII. CONCLUTION

The point accuracy of satellite attitude control used to collect the data from several on-board sensors. This paper discusses the various oscillations in satellite dynamics with orbital perturbations. The PD compensator introduced to reduces the overshoots. The future scope of this project to estimate the errors from attitude sensor in the system by implementing the Kalman filter. The Kalman filter used to minimize the covariance and standard deviation. Less standard deviation indicates the less errors from the measurements. Also to predicts the future estimate of the state. The extensive of this work to develop the state space model of Kalman filter.

IX. ACKNOWLEDGMENT

I would like to extend my sincere gratitude to Sr. Professor Dr, Guven and professor Dr Om Prakash and Dr Sudhir joshi and. My Colleagues University of Petroleum and Energy Studies, Dehradun, India and My parents believe me for this , Kokila, my wife for her valuable support till end

REFERENCES

[1] S. K. Shrivastava and V. J. Modi, "Satellite Attitude Dynamics and Control in the Presence of Environmental Torques" - A Brief Survey," Journal of Guidance, Vol 6, No.6, December 1983.

[2] Wen, J., and Kreutz-Delgado, K., "The Attitude Control Problem", IEEE Transactions on Automatic Control, Vol. 36, No. 10, 1991, pp. 1148–1162. doi:10.1109/9.90228.

[3] Shuster M and Oh S. "Three-axis attitude determination from vector observations", Journal of Guidance and Control 1981; 4: 70–77.

[4] S. K. Shrivastava, "effects of solar radiation pressure and aerodynamic forces on satellite attitude dynamics and their utilization for control: a survey", Department of Aeronautical Engineering, Indian Institute of Science, " Bangalore-12 Received on May 31, 1976 and in revised form on July 26, 1976. No. 12, pp. 391-410, 1976.

[5] Kim, S., and Kim, Y., "Spin-Axis Stabilization of a Rigid Spacecraft Using Two Reaction Wheels," Journal of Guidance, Control, and Dynamics, Vol. 24, No. 5, 2001, pp. 1046–1049.doi:10.2514/2.4818.

[6] WH Steyn, "Comparison of Low-Earth Orbiting Satellite Attitude Controllers Submitted to Controllability Constraints", AIAA Journal of Guidance, Control, and Dynamics, Vol.17, No.4, July-Aug.1994, pp.795-804.

[7] S. Rawashdeh, J. Lumpp, "Nano-Satellite Passive Attitude Stabilization Systems", Design by Orbital Environment Modeling and Simulation", AIAA Infotech Aerospace 2010, Atlanta, GA.

[8] Psiaki, M. L., "Nanosatellite Attitude Stabilization Using Passive Aerodynamics and Active Magnetic Torque", Journal of Guidance, Control, and Dynamics, 2004, Issue 3, Vol. 27, pp. 347–355.

[9] Lian, B., and Bang, H., "Momentum Transfer Based Attitude Control of Spacecraft with Backstepping," IEEE Transactions on Aerospace and Electronic Systems, Vol. 42, No. 2, 2006, pp. 453–462.doi:10.1109/TAES.2006.1642563.

[10] S. J. Julier and J. K. Uhlmann. "A Consistent, Debiased Method for Converting Between Polar and Cartesian Coordinate Systems. In The Proceedings of Aero Sense: The 11th International Symposium on Aerospace/Defense Sensing, Simulation and Controls, Orlando, Florida. SPIE, 1997. Acquisition, Tracking and Pointing XI.

[11] Schaub, H., and Junkins, J. L., "MATLAB Toolbox for Rigid Body Kinematics," Proceedings of the AAS/AIAA Space Flight Mechanics Meeting, Breckenridge, CO, American Astronautical Soc. Paper 99-139, Springfield, VA, 7–10 Feb. 1999, pp. 549–560.

[12] Schaub, H., and Junkins, J. L., "MATLAB Toolbox for Rigid Body Kinematics," Proceedings of the AAS/AIAA Space Flight Mechanics Meeting, Breckenridge, CO, American Astronautical Soc. Paper 99-139, Springfield, VA, 7–10 Feb. 1999, pp. 549–560.

[13] M. Sidi. Spacecraft Dynamics And Control: a practical engineering approach. Cambridge University Press, 1997.

[14] J. Wertz. Spacecraft Attitude Determination and Control, Springer, Netherlands, 1987.

[15] Chaturvedi, N. A., Global Dynamics and Stabilization of Rigid Body Attitude Systems, Ph.D. Dissertation, Univ. of Michigan, Ann Arbor, MI, 2007

[16] Choukroun D. Novel methods for attitude determination using vector observation. PhD Thesis, Israel Institute of Technology, 2003

[17] C. Kaplan. LEO Satellite, Attitude determination and control components, some linear control methods, MSc. thesis, METU 2006

[18] R. Kristiansen. Attitude Control of a Microsatellite. Master Thesis, Department of Engineering Cybernetics, NTNU, 2000

[19] Schwartz JL. The distributed spacecraft attitude control systems simulator: from design concept to decentralized control. PhD Thesis, Virginia Polytechnic Institute and State University, Blacksburg, VA, 7 July 2004.