DIGITAL CONTROL TECHNIQUES IN POWER ELECTRONICS CONVERTERS-AN COMPREHENSIVE REVIEW

[1]S Bhanu Prakash, [2] Gagan Singh

[1]Assistant Professor, [2]Professor

[1]Electrical Engineering

[1]DIT University, Dehradun, India

Abstract: This paper address to some of digital control techniques using for control of power electronic converters. Over the last two decades, digital controllers and digital control methods have been widespread in applications such as motor drives and power converters for utility interfaces. A simple classification of some important types of digital control techniques is introduced and each one of them is explained. The basic concepts, operating principles and control diagrams are used to provide a comparison between the different types of digital control techniques.

IndexTerms **-** DC-DC converters, Digital control

I. INTRODUCTION

The use of power converters has become very popular in recent decades for a wide spread of applications such as energy conversion, traction, drives and distributed generation. The control power converters have been studied extensively and new control schemes are presented every year. Several control techniques have been proposed for control of power converters. In this paper some of them are explained. Some of these control techniques for power converters include digital current mode control, sliding mode control, fuzzy control and predictive control. Digital current mode control is a new method for improving dynamic characteristics of high frequency PWM converters. Sliding mode presents robustness and taken into account the switching nature of the power converters. Fuzzy logic is suitable for applications where the controlled system or some of its parameters are unknown. Predictive control has several advantages compared to other type of control techniques which makes it suitable for control of power converters. Predictive controller is easy to implement, but it requires high amount of computations compared to classical control schemes. However, the implementation of predictive control is easy with the help of fast microprocessors available. This paper presents the survey of some important types of digital control techniques applied in power electronics converters. Brief history of control techniques presented in Section II. A classification of some digital control techniques is explained in Section III. A comparison of these digital control techniques in Section IV, and finally some conclusions are made.

II. BRIEF HISTORY

Over the last two decades the digital controller and digital control techniques has become very popular in applications such as power electronic converters and motor drives. Digital control has several advantages over the analog control. Digital control techniques offer the possibility of implementing advanced control concepts like predictive digital current mode control and adaptive control, which is impracticable with the standard analog circuits [1]. The important feature of digital control is programmable gives the flexibility, which allows the designer to modify the control strategy without the need of hardware modifications [2]. The other advantages are less susceptible to ageing, environment variations and less sensitive to parameter variations. The digital controller is also suffering from some disadvantages such as limited digital PWM resolution, steady state limit cycle [3] and inherent time delay.

The design of digital controller has two approaches. In the first approach the zero-order holds (ZOH) and samplers are ignored and a preliminary design is made in S-domain. This design is then converted into discrete time by using some appropriate technique. The second approach is the continuous plant with zero-order hold and samplers is converted into discrete time. Then the discrete time compensator can be designed directly in the z-domain by using methods similar to the continuous frequency response methods [4].

III. TYPES OF DIGITAL CONTROL TECHNIQUES

3.1. Digital Current Mode Control. Digital current mode control is a new method of improving the dynamic characteristics of high frequency PWM converters [1]. The predictive digital current programmed control developed in [5] each switching cycle is based on sampled value of current, the duty ratio in previous cycle, value of inductance and samples of input and output voltages. The current mode control explained in this paper uses the current mode control principle directly.

Fig.1. represents the block diagram of current mode control for dc-dc converter. In this method the controller samples the inductor current at the rate of switching frequency of the converter. The duty ratio is obtained by equating the sampled current to modulator current by adding the compensating ramp to the output of the voltage error amplifier [6]. The function of the DPWM is to produce the

switching signals that corresponds to the calculated duty ratio. The advantage of this digital current mode control is the duty ratio can be calculated without knowing the value of inductance and input and the output voltages.

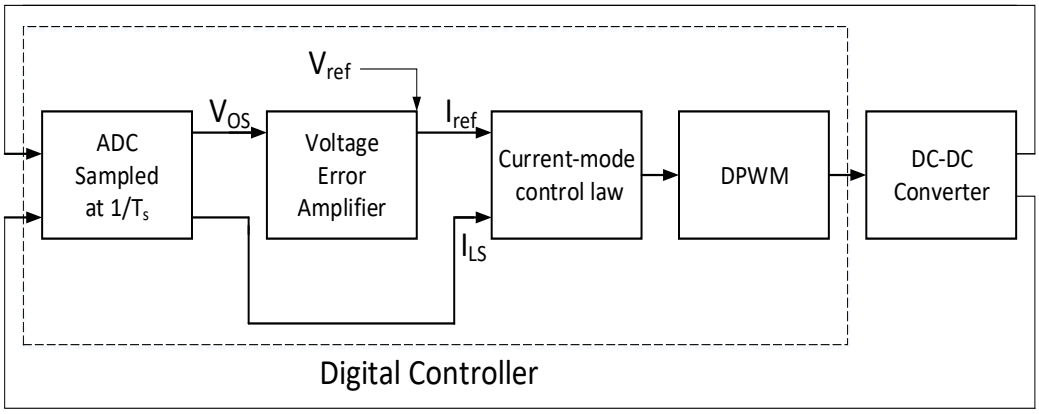

Fig.1. Block diagram of digital current mode control.

The duty ratio can be calculated by simple current law, if we add the periodic compensating ramp $i_c(t) = -mc\ t$, $0<t<T_s$ to the reference current I_{ref} in order to get expression for modulator current $i_M(t) = I_{ref} + i_c(t)$, at the instant dT_s the sampled current i_{LS} is equal to modulator current $i_M(t)$ then

$$i_{LS} = I_{ref} - mc\ dT_s \text{ --------- (1)}$$

Then duty ratio can be expressed as

$$d = \frac{Iref - iLS}{mcTs} \quad \text{--------(2)}$$

3.2. Sliding Mode Control. The sliding mode control has several advantages compared to the traditional PID control in terms of low sensitivity to loop disturbances, fast transient response and robustness to parameter variations. The challenges associated with digitally controlled dc-dc converter is the need of digitally controlled PWM generator (DPWM) block, which generates the command signal of duty ratio for pulse train. The DPWM causes delay and phase lag which is undesirable in the feedback control systems. In order to eliminate the need of DPWM in digitally controlled converters sliding mode control (SMC) approach is used.

In [7] the new sliding mode control method is proposed in this system analog voltage error is sampled and digital sliding mode control is used to adjust the duty ratio. This method works on a fixed switching frequency. This approach significantly slows down the transient response.

In [8] another approach of digital sliding mode control (DSMC) is proposed. In this proposed system the small signal digital PID compensation block and DPWM generator block is replaced by digital sliding mode control (DPWM). The dc offset error associated with SMC is suppressed by using an integrator. This oversampled DSMC enables the fast response regulator without the need of DPWM generator. It uses a high bandwidth hysteretic differentiator and an integrator to perform the sliding control action in digital domain. The DSMC provides fast transient response to load and line variations and less sensitivity to disturbances.

3.3. Fuzzy Logic Controller. Fuzzy logic is proposed by Lofty Zadeh in 1965 it deals with uncertainties and qualitative decision-making control problems. In a fuzzy logic controller, the control action is determined is evaluated from the set of simple linguistic rules. The development of rules requires a thorough understanding of the process to be controlled, but it does not require any mathematical model of the system. Fig.2 represents the block diagram of fuzzy controller.

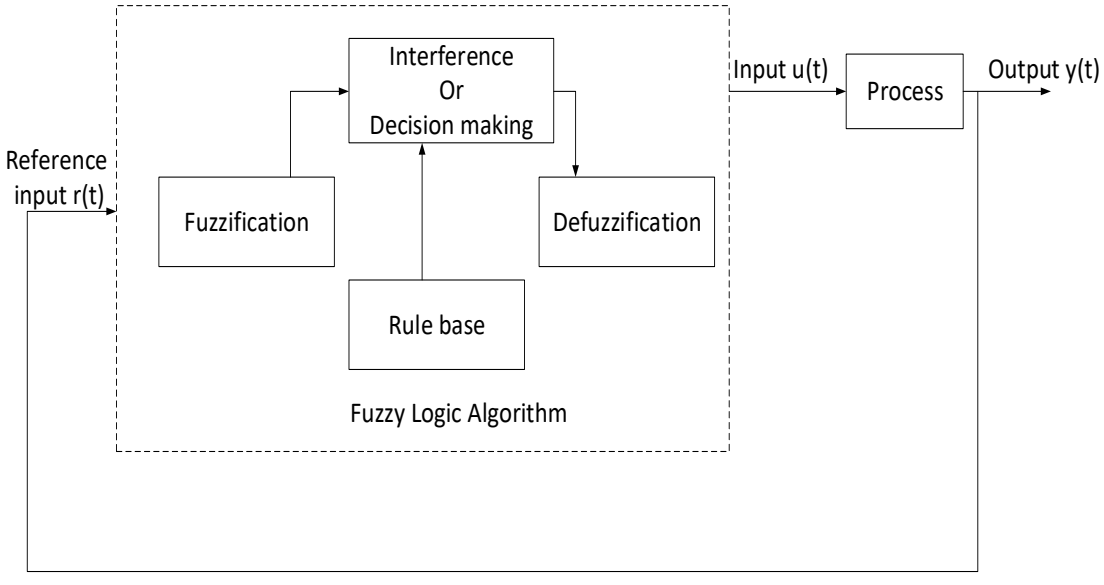

Fig.2. Block diagram of fuzzy logic control

Fuzzy logic controller has three principle sections: a. Fuzzification, which is a classification of input data into suitable linguistic rules. b. Decision making, which is inferring fuzzy control action from the knowledge of the control rules and the linguistic variable definition. c. Defuzzification, which is the conversion of the inferred fuzzy control action to a crisp or non-fuzzy control action [9].

Fuzzy based controller is used for DC-DC converters in order to maintain constant output voltages regardless to variations at converter input voltage. In [10] DSP based fuzzy controller is proposed which provides greater reability and fast system response. Both simulation and experimental results are presented in [10]. It shows that this controller minimizes the effects of increase in load resistance and input voltage variations and maintaining constant voltage at its output terminals.

In [11] two controllers are proposed, digital proportional-integral-derivative (PID) type controller and fuzzy type controller for application of buck and boost dc-dc converters. These two controllers are compared in aspect of design, implementation and performance. The PID and fuzzy controllers have been implemented and evaluated using a Texas Instrument (TI) eZdsp F2812. The eZdsp is standalone evaluation module with a TMS320F2812 DSP, which is a 32-bit fixed point DSP controller with on-board flash memory.

In [11] PID and PI controllers are applied for buck and boost converter in order to have start-up transient and stable steady state response. Fuzzy controller is used for boost converter, it has two different controller configurations were used for start-up transient and for steady state to obtain fast and stable response, while for buck converter only one configuration was applied. Design of Fuzzy controllers does not require mathematical model, while the design of PID controller requires small signal models. Experimental results show that Fuzzy controller gives fast transient response and stable steady state response for both buck and boost dc-dc converters.

In [9] Fuzzy based controller for dc-dc converter is implemented by using inexpensive 8-bit microcontroller is proposed. The fuzzy logic control algorithm is implemented on a Philips Semiconductors 87C752, a low-cost derivative of 80C51 architecture. These experimental results show that the implementation of fuzzy based controller using micro controller provides the feasible operation for regulating the output voltages of buck and boost configurations and it gives the desired values without steady state oscillations. The main objective of implementation of fuzzy based controller is to control dc-dc converters without using expensive digital signal processor or specialized hardware.

3.4. Model Predictive Control. Model Predictive Control (MPC) is a very attractive solution for controlling power electronic converters. MPC working principle is based on the prediction of the system behaviour using a mathematical model and the optimization of cost function. When applied to the power electronics converters this principle is divided into three following steps[12].

- Calculation of the predicted variables of the system using a discrete model.
- Evaluation of the cost functions for each one of the switching state of converter.
- Selection – application of the optimal switching state.

Fig.3. represents the block diagram of basic MPC strategy for power converter. The reference and predictive currents at instant k+1 are used in order to compensate for the digital implementation delay[13]. The algorithm is repeated for each sampling instant and it performs different following steps;

- The optimal control action S is computed at instant k-1
- Measurement of the current is taken at instant k.
- The prediction model is used to make prediction of value of the current X(k+1) at instant k+1.
- Evaluation of cost function and optimal control action to be applied at instant k+.

In [14] classification of different MPC strategies used for power converters and drives are discussed. Fig.4. shows the most common MPC strategies using for power electronics this classification is based on the type of the optimization problem.

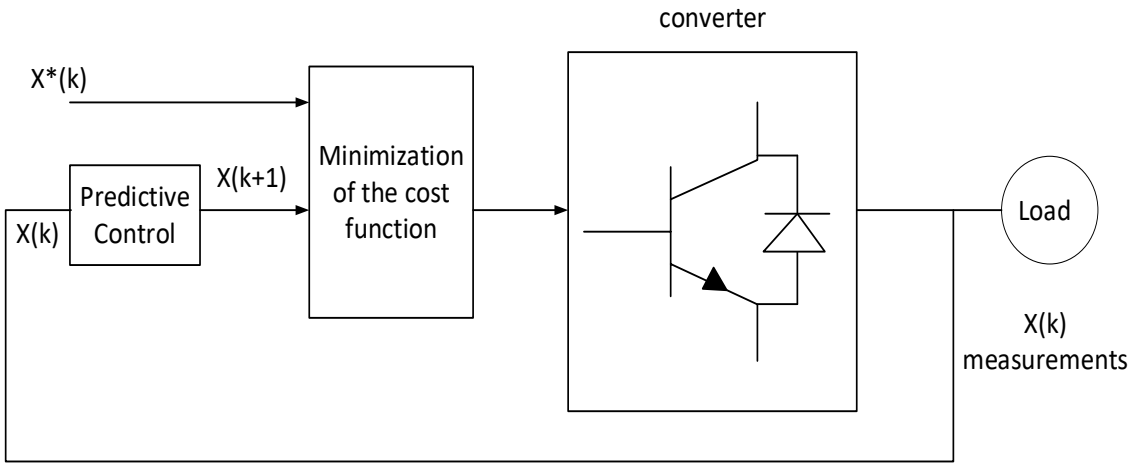

Fig.3. Block diagram of Basic MPC strategy for Power Converter.

There are two main MPC strategies one is Continuous Control Set MPC (CCS-MPC) and the other is Finite Control Set MPC (FCS-MPC). In Continuous Control Set MPC it computes the continuous control signals and then it generates the desired output voltages in power converters by using a modulator. The main advantage of CCS-MPC is it produces fixed switching frequency. The most common used CCS-MPC strategies are General Predictive control (GPC) and Explicit MPC. General Predictive Control (GPC) is used to work with linear and unconstrained problems whereas Explicit MPC is works with non-linear and constrained systems. Both GPC and EMPC present complex formulation of the MPC problem when applied to power converters. Finite Control Set MPC is deals with discrete nature of power electronic converters to formulate the MPC algorithm and it does not require any modulator. FCS-MPC is divided into two strategies: Optimal Switching Vector MPC (OSV-MPC) and Optimal Switching Sequence MPC (OSS-MPC). OSV-MPC was the first FCS-MPC strategy used for power electronics. It uses the possible output voltage vectors of the power converters as control set. OSS-MPC control set is composed by a limited number of possible switching sequences for switching period. In [14] several issues have been investigated by researchers such as cost function selection, weighing factor design and reduction of the computational cost.

In [15] classification of different predictive control methods is proposed. The advantage of Predictive Control method is concepts are intuitive and easy to understand. The predictive control methods are divided into groups: dead beat control, hysteresis-based control, trajectory - based control, continuous set MPC and finite set MPC. The difference between these controllers is for dead beat control and continuous set MPC requires a modulator to generate the desired voltage of power converter. This will produce a fixed switching frequency. The other controllers do not need any modulator for generating of switching signals for the converter. This results in the variable switching frequency. These controllers have an advantage of dealing with discrete nature of the power converters and choose an optimal solution from the possible switching states according to the minimization of the predefined cost function.

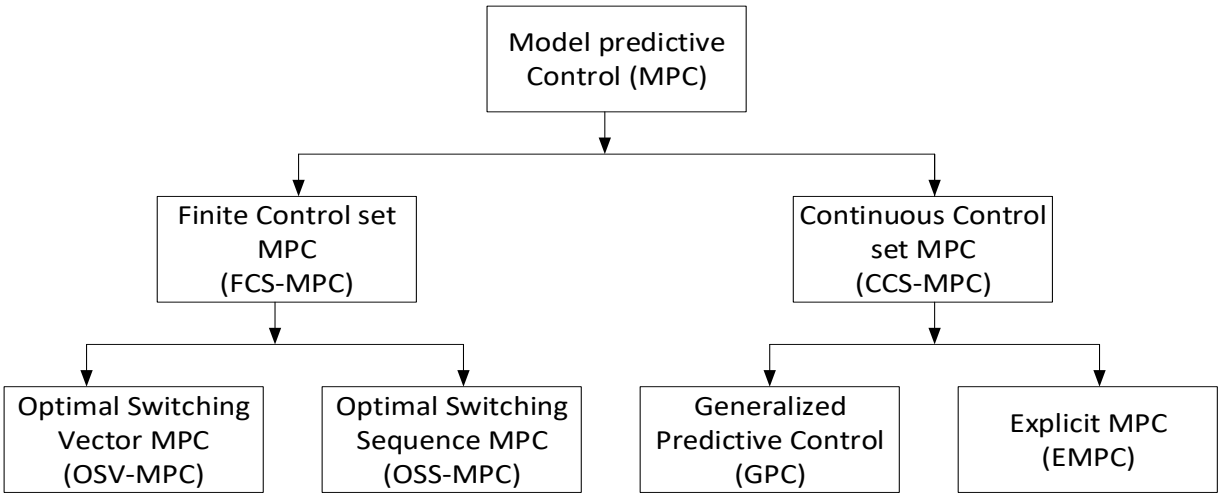

Fig.4. Classification of MPC strategies applied to Power Converters and Drives

IV. COMPARISON OF DIGITAL CONTROL TECHNIQUES.

Different digital control techniques are compared based on their performance and shown in Table I.

V. CONCLUSION

This paper reviewed various digital control techniques applied to power electronic converters. The mostly used digital controllers are described and comparisons of these controllers based on their performance are discussed. Every control technique has its own advantages and disadvantages. However, Model Predictive Control (MPC) has proved to be modern, attractive solution and competitive alternative for the control of power electronics converters. MPC offers challenging opportunities for research in power electronic converters and electric drives.

TABLE I
COMPARSION OF DIGITAL CONTROLLERS

S.No.	Type of controller	Advantages and Disadvantages
1	Digital Current Mode Control	Advantages: • Simple design • Directly applied to switching converter Disadvantages: • Computational burden • Maximum switching frequency when implemented on digital hardware.
2	Sliding Mode Controller (SMC)	Advantages: • Directly applicable to switching converter. • Robustness against disturbance and uncertainties. Disadvantages: • Very high chattering.
3	Fuzzy Controller	Advantages: • Linguistic variables. • Non linear control. Disadvantages: • Problems with Defuzzification • Heuristic Design.

4	Model Predictive Control (MPC)	Advantages: • Simple design • Non linear control • No modulation • Includes constraints and non linearities. Disadvantages: • High computational • Variable switching frequency. • Heuristic design of weighing factor.

REFERENCES

[1]. Ali Emadi, Alireza Khaligh, Zhong Nie and Young Joo Lee, "Integrated power electronic converters and digital control", CRC press 2009.
[2]. Simone Buso – "Digital control in power electronics", Morgan and Claypool publishers (2006).
[3]. Peterchev, A.V. and S.R. Sanders, "Quantization resolution and limit cycling in digital controlled PWM converters", IEEE Transactions on Power Electronics, (1 part 2), pp. 301-308.
[4]. Martin, T.W. and S.S Ang, "Digital control for switching converters", IEEE international symposium on Industrial Electronics, pp. 480-484.
[5]. Jingquen Chen, Akleksandar Prodic, Robert W. Erickson and Dragan Maksimovic, "Predictive Digital Current Programmed Control", IEEE Transactions on power electronics, vol. 18, no. 1, pp. 411-419, January. (2003).
[6]. Souvik Chattopadhyay and Somshubhra Das, "A Digital current mode control technique for DC-DC converters", IEEE Transactions on power electronics, vol.-21, No. 6, November (2006).
[7]. A. G. Perry, G. Feng, Y. Liu and P.C. Sen, "A new sliding mode like control method for buck converter", IEEE conference on Power Electronics, vol. – 5, pp. 3688-3693. June (2004).
[8]. Ahmad Dashtestani and Bertain Bakkaloglu, "A Fast settling over sampled digital sliding mode dc-dc converter", IEEE Transactions on Power Electronics, vol. 30, pp. 1019-1027. February (2015).
[9]. T. Gupta, R.R Boudreaux, R.M. Nelms and J.Y. Hung, "Implementation of a Fuzzy controller for DC-DC converter using inexpensive 8-bit Microcontroller", IEEE Transactions on Industrial Electronics, vol. 44, no. 5, pp. 661-669. October (1997).
[10]. Joao T. Decarvalho Neto, Andres O. Salazar, Fabio M. U. de. Araujo and Anderson L. de O. Cavalcanti, "DSP based Fuzzy controller applied to a DC-DC boost converter", IEEE symposium on Industrial Electronics.
[11]. Liping Guo, John. Y. Hun and R.M. Nelms, "Evaluation of DSP based PID and Fuzzy controllers for DC-DC converters", IEEE Transactions on Industrial Electronics, vol. 56, No. 56, pp. 2237-2248. June (2009).
[12]. Samir Kouro, Marcelo A. Perez, Jose Rodriguez, Ana M. LLOR and Hector A. Young, "Model Predictive Control", IEEE Industrial Electronics Magazine, pp. 8-21. December (2015).
[13]. Partico Cortes, Jose Rodrigue, C. Silva and A. Flores, "Delay compensation in model predictive current control of a three-phase inverter", IEEE Transaction on Industrial Electronics, vol. 59, no.2, pp. 1323-1325, February (2012).
[14]. Sergio Vazquez, Jose Rodriguez, Marco Rivera, Leopoldo G. Franquelo and Margarita Norambuena, "Model Predictive Control for Power Converters and Drives: Advances and Trends", IEEE Transactions on Industrial Electronics. (2016).
[15]. Patrico Cortes, Marian P. Kazmierkowski Ralph M. Kennel, Daniel E. Quevedo and Jose Rodriguez, "Predictive control in power electronics and drives", IEEE Transactions on Industrial Electronics, vol. 55 no. 12, pp. 4312-4324. December (2008).